REVISION HISTORY				
ZONE	REV	DESCRIPTION	DATE	APPROVED
	-	INITIAL RELEASE	3/25/15	hhmi\\arnoldj

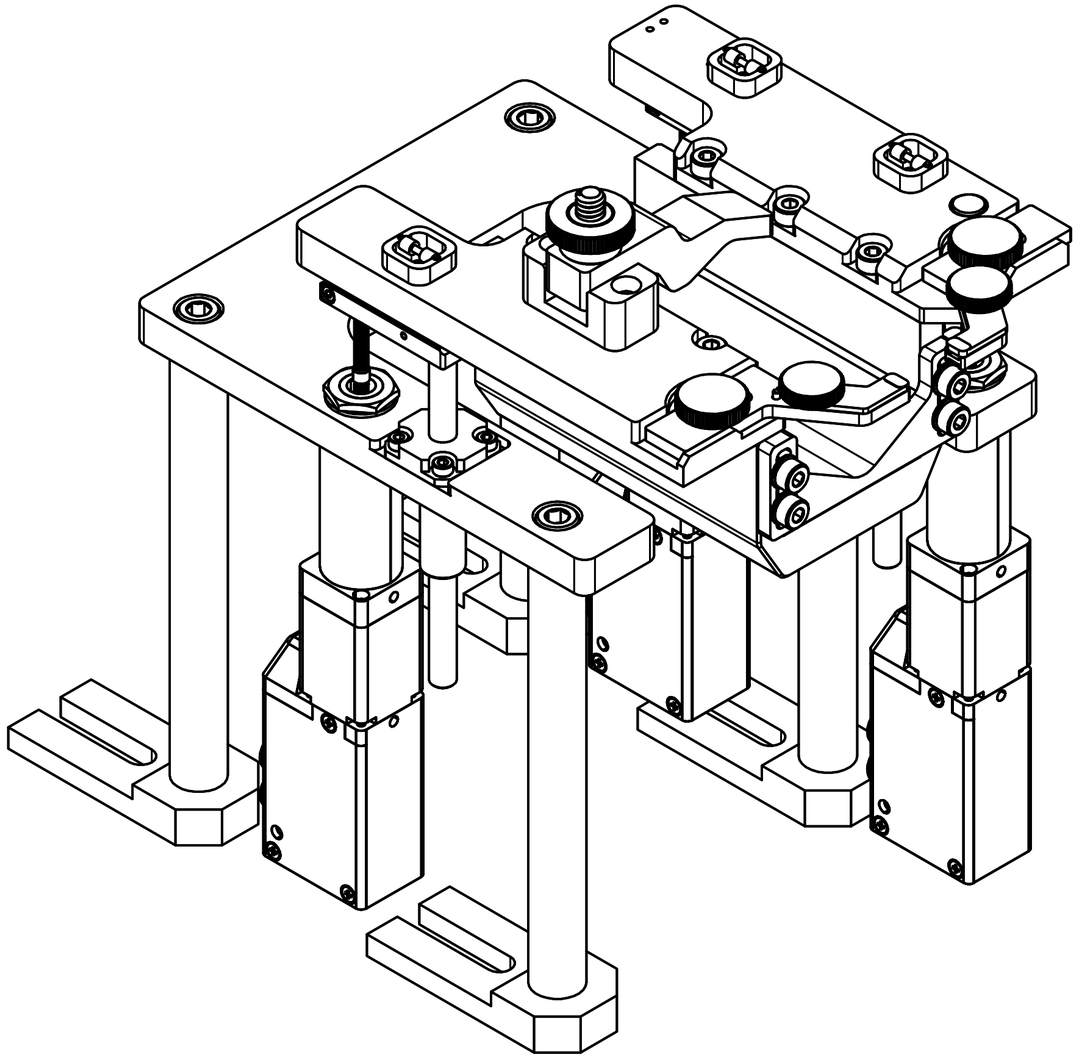

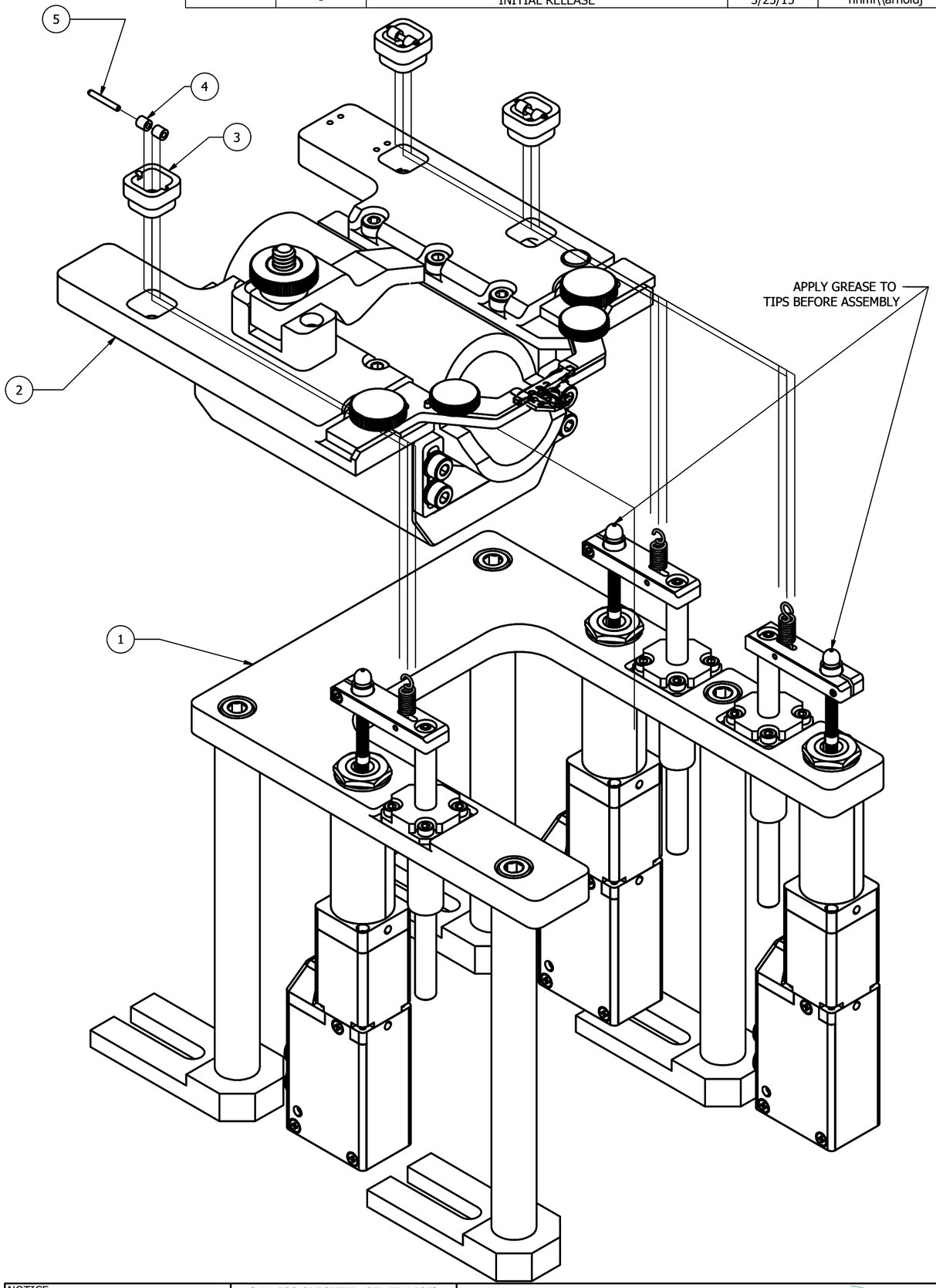

NOTES:
1.) APPLY A SMALL AMOUNT OF THORLABS GREASE PART NUMBER GKZ8 WHERE SHOWN
2.) ENSURE THAT ACTUATOR TIPS ARE SEATED BETWEEN PINS AND IN SOCKET ON TOP PLATE ASSEMBLY.
3.) SPRINGS, PART OF THE BOTTOM PLATE ASSY, MUST THEN BE HOOKED AROUND THE PINS
INSTALLED IN THE PIN BLOCKS IN THE TOP PLATE. HOOK THE SPRING WITH A WIRE OR TOOL,
GUIDE ONTO PIN, AND INSTALL THE SPACERS SUCH THAT THE SPRING HAS A SPACER ON EITHER SIDE

ITEM	QTY	FILE NAME	PART NUMBER	VENDOR	DESCRIPTION	A.I. PART #	A.I. VENDOR
1	1	MPS Bottom Plate Assy.iam	J005124	HHMI: JFRC - ID&F	MPS BOTTOM PLATE ASSY	N/A	N/A
2	1	MPS Top Plate Assy.iam	J003014	HHMI: JFRC - ID&F	MPS TOP PLATE ASSY	N/A	N/A
3	3	MPS Pin Block.ipt	J002873	HHMI: JFRC - ID&F	MPS Pin Block	N/A	N/A
4	6	94639A459.ipt	94639A459	MCMASTER	SPACER, NYLON, #0 SCREW, 1/8 L	N/A	N/A
5	3	SXSS-D1_5-L11_5-E0_5.ipt	SXSS-D1.5-L11.5-E0.5	MISUMI	LOCATING PIN, SS, 1.5MM DIA, 11.5MM L	N/A	N/A

PARTS LIST

NOTICE:
INFORMATION CONTAINED IN THIS DOCUMENT OR ANY REPRODUCTION THEREOF, IS PROPRIETARY INFORMATION AND PROPERTY OF HOWARD HUGHES MEDICAL INSTITUTE. IT SHALL NOT BE DISCLOSED, COPIED, DUPLICATED OR USED FOR MANUFACTURE, PRODUCTION OR PROCUREMENT, WITHOUT THE EXPRESS WRITTEN PERMISSION OF HOWARD HUGHES MEDICAL INSTITUTE.

(UNLESS SPECIFIED OTHERWISE)
PRIMARY UNITS: INCHES
[SECONDARY UNITS]: MILLIMETERS

PRIMARY TOLERANCES:

X.X	± 0.020
X.XX	± 0.010
X.XXX	± 0.005
X.XXXX	± 0.0005
ANGULAR	± 0.5 DEG

- DO NOT SCALE DRAWING -

THIRD ANGLE PROJECTION:

hhmi Howard Hughes Medical Institute

hhmi janelia Research Campus

MPS Top Level Assy.iam

SIZE	PART NUMBER	REV	SHEET
C	J005128	-	1 OF 1